INSTRUCTIONS FOR USE
SPARE PARTS LIST

TONGS FOR LOGS

SCORPION 1300

SCORPION 1800

THE MANUFACTURER:

Uniforest d.o.o.
Latkova vas 81d
3312 PREBOLD

Valid from serial number:

1300FL	1356
1300FL (valve)	1356
1800F	2199
1800 F (mechanical rotator)	2097
1800 BC	2186

EN

16/09/2020

Index

1. Introduction

These instructions for use are intended for personnel, who must read, understand and follow the conditions, especially chapter "Safety instructions", and who is in charge of installation, start-up, control, and maintenance of the machine and repairs of the machine. Complete technical documentation is an integral part of the machine and must always be available at the site of use. Each person in charge of the machine must be familiar with instructions for use in detail.

We recommend that you read the instructions for use before using the machine thoroughly, because we accept no responsibility for damages and operation faults, which are result of non-compliance with these instructions!

If you have any problems, contact the company Uniforest, where their experts will be happy to help and give advice. Regular maintenance and timely replacement of worn or damaged parts significantly increases the life-span of tongs for logs. We reserve the right to changes of technical drawings and information in these instructions for use, which are required for improvement of the machine.

2. Area of use

Pliers for wood may be used only for routine use in forestry work, for long and short timber, because of the economy of loading wood. Pliers for wood may be used only for purposes that are given in "Technical documentation". Before you use the machine for any other purposes, please consult with specialists of the company Uniforest, otherwise we are unable to recognize free repairs during the warranty period.

3. Technical data

The machine is designed to transport more logs at once. Connection on a tractor: hydraulic lift, loader The place of handling: from the tractor Drive: through hydraulic equipment on the tractor Connections for hydraulic power: through the tractor hydraulic lines

Type of pliers for timber		**Scorpion 1300 F**	**Scorpion 1800 F**
For two – way flow	Mechanic rotator		1 x 2
For the circular flow	Hydraulic rotator	1 x 2	1 x 2

Hydraulic pressure: max. 200 bar

Tongs for logs-type	**Scorpion 1300 F**	**Scorpion 1800 F /1800 BC**
Connection	Euro connection	Three-point and connection
Solenoid valve	□	(loader)
Max. width of gap	1300 mm	1800 mm
Min. diameter of clamping	70 mm	80 mm
Hydraulic rotator	■	□
Mechanic rotator	□	■
Tong force	85 kN (8,5t) bei 180 bar	95 kN (9,5t) bei 180 bar
Total weight	226 kg	357 kg
length	1100 mm	1300 mm
width	1200 mm	1200 mm
height	1000 mm	1300 mm

■ Serial □ option

Sound level does not exceed the level of 70 dB.

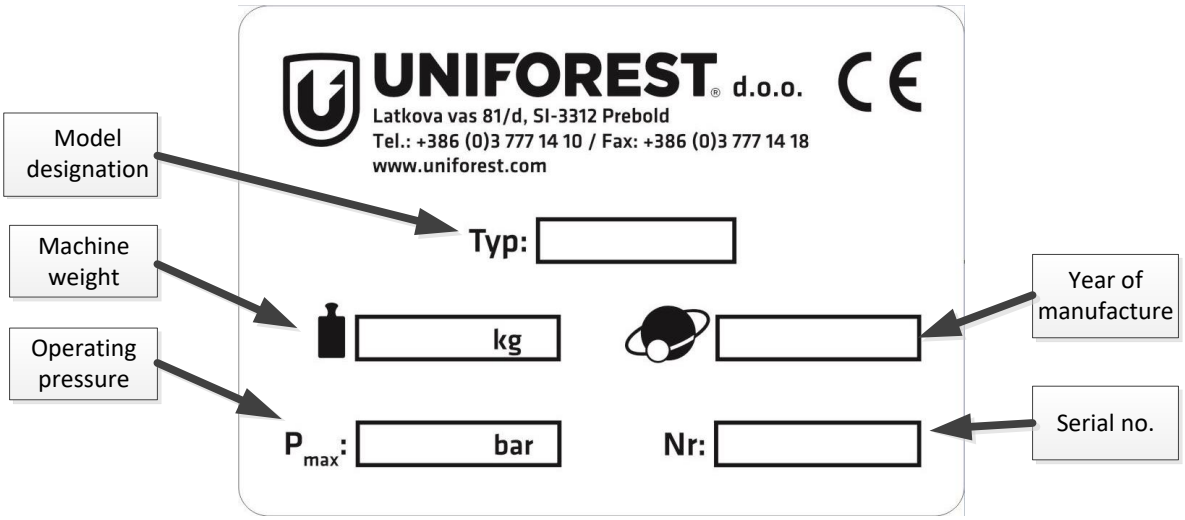

4. Safety sign

This symbol is located in all safety warnings and instructions for use in machinery, which may lead to physical injury and where there is danger of a loss of life. Consider the warnings and be in such cases, extra careful. Beside the safety warnings in the instruction book, also consider general valid regulations about the safety and other clauses to prevent accidents.

5. Warning

ATTENTION!
Warning »ATTENTION« is located at the points in the instruction book, which should be particularly taken into account, because it warns on the guidelines, rules, warnings and because such a warning can prevent damage and destruction of the machine.

6. Safety instructions

The machine is produced in accordance with most recent achievements in technologies, which ensures high reliability of operation. The machine can be operated only by properly trained personnel in accordance with its purpose of use.

At the beginning of the shift, machine operator must check the operation of control and safety device, and also, during the shift, check the machine's state for visible faults.
Machine operator must immediately inform about any changes on the machine, which could jeopardize safety. Upon machine faults or disturbances, which could jeopardize safety, the machine operator must immediately stop the machine. Only qualified, trained and experienced personnel are allowed to use, maintain and repair the machine.

Determine explicitly, who is competent for machine start, control and maintenance, so there are no obscurities regarding competence.
Waive any work, which could affect the safety of the machine.
Machine operator must ensure that only authorized personnel uses the machine.
For safe operation of the machine, traffic regulations, safety regulations and accident prevention regulations always apply.
When the machine is in operation, persons not authorized are not allowed to stand in the work area of the machine. It is strictly forbidden for other persons to manually assist with log loading.
Ensure proper loading and unloading, so people are not exposed to danger of falling objects and objects, which could tip over, roll over or roll away.
Transporting other persons on the machine is prohibited.

6. Safety patches

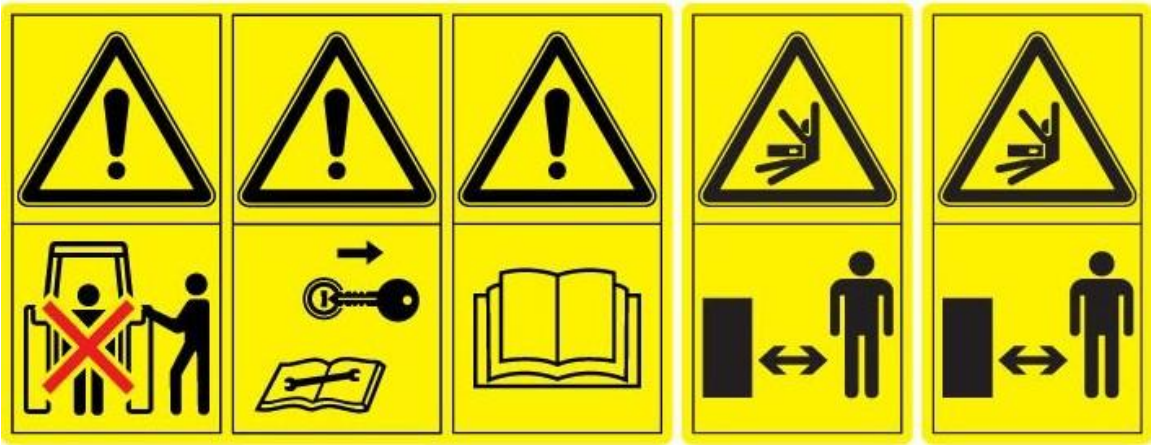

8. Connection – disconnection

The machine is constructed for connection to tractor hydraulic lift or loader, connected to tractor hydraulic lift.

	
Connection to tractor hydraulic lift	Connection to loader

8.1 Connection on a tractor

To tractor hydraulic lift

Move the tractor to the three – point connection of the pliers for timber, until the bolts of the three – point connection and the bolt holes on the lower liftable crossbars on a tractor do not match.
Be aware of the thing, that between the tractor and pliers for timber are not located any persons.
Insert the bolts in the holes and secure them with tractor pin.
The tractor must be switched off, when the driver switches control lever on hydraulics.
Set up upper lever 1 to the desired length and fasten and secure him on the upper part of the three – point connection (Figure 1). Connect hydraulic lines on a tractor.
Move support leg 3 in transport position (figure 2).

To loader
The procedure is identical as for any other tool for loader, only here you have to connect tongs for logs. Between the tractor and tongs for logs no persons, animals or object are allowed. The tractor must be shut down, when the driver connects the hydraulics. Connect hydraulic line to tongs for logs according to hydraulic version of tongs. Move support leg 2 in transport position (figure 2).

Pliers for timber after the finished work always put down in a closed condition.

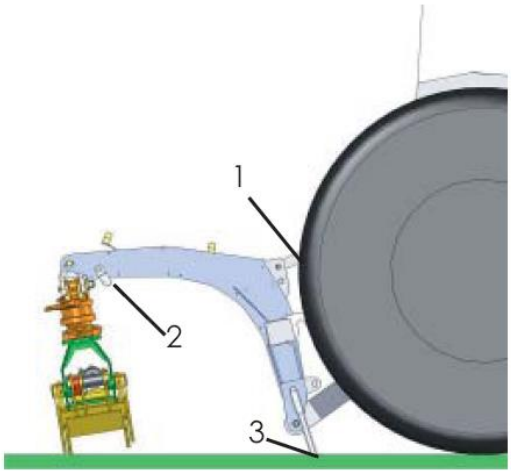

Figure 1: Connection on a tractor

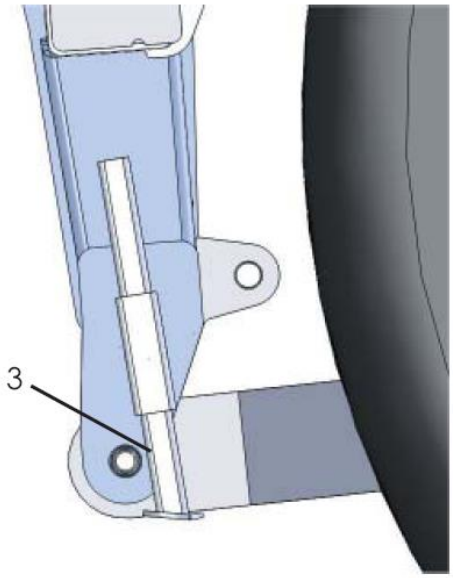

Figure 2: support leg in transport position

8.2. Disconnection of a tractor

From tractor hydraulic lift
Move support leg 3 in support position (figure 1). Pliers for timber before disconnecting them from the tractor, always put down on a flat and solid ground in the closed condition. First check, whether the pliers are secured against the movement with bolt 2 (Figure 2). Disconnect the hydraulic hoses, place protection on the quick thimbles and insert them into the place on connection. In the case of the steering console, insert her on a supposed place on a connection. Upper control lever loosen and disconnect. Lower tractor arms disconnect.

From loader
Move support leg 3 in support position (figure 1). Put tongs for logs on flat, solid ground, when they are closed. Check beforehand that the tongs are secured against movement with bolt 2 (figure 1).
Disconnect hydraulic lines, set protections for quick clamps and put them on the storage place on the connection. Disconnect from the loader.

9. Handling

Pliers for wood are handled through steering device of a tractor or with solenoid valve.

ATTENTION!

By using the pliers handle hydraulic cylinders and hydraulic rotator without sudden movements and with appropriate low flows to 40l/min. Do not overload the pliers above the allowed weight.
Carrying the trunks always perform as the instruction book defines. Vital parts always check before use, so that there are no possible injuries.

By injuries that would arise because of noncompliance of the machines instruction book, warranty terms do not valid and the manufacturer eliminates defect at the expense of the buyer.

9.1. Transport

When the pliers for wood are operating, unauthorized persons must not be located in the range of a working machine. When driving on public road it is necessary to install a warning plate on the pliers and the lights should be switched on, we must also secure the swinging with the bolt 1 (Figure 4).

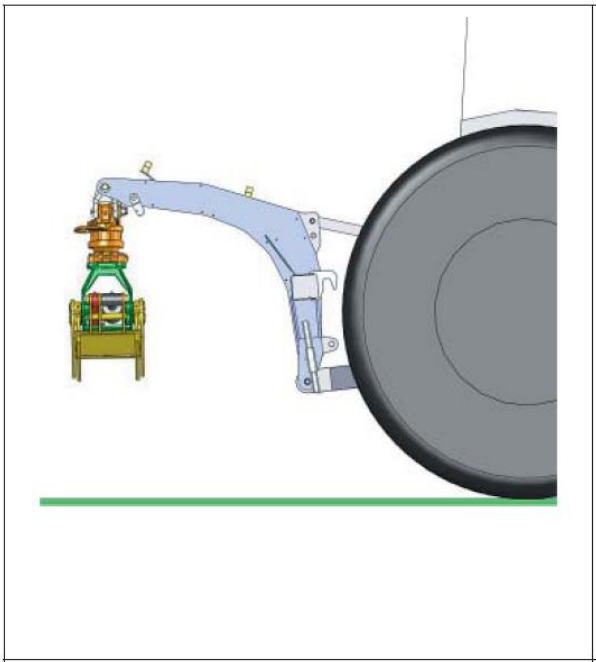

Figure 3: Transport position of the pliers (closed pliers)

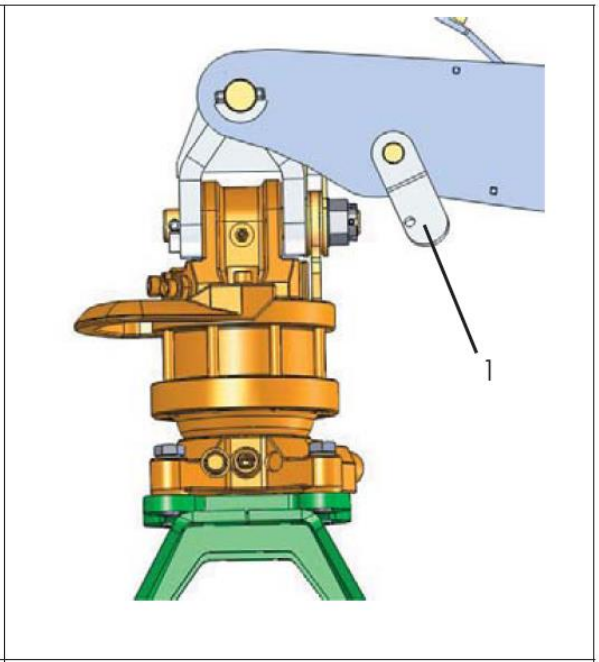

Figure 4: Prevention that the pliers swing during the transport with bolt and tractor cork (1)

9.2 *Angular setting between tractor arms and controlling pole*

Pliers are designed to draw trunks and occasionally loading. According to the purpose of use, it is necessary to adjust the height of fasten the tractor arms on pliers as well as upper steering lever of the three – point connection.

- When you want to use pliers to draw trunks, set the tractor arms 1 and upper steering pole 2 parallel, as much as possible (Figure 5).
- But if you want to load with pliers, then the angle between tractor arms 1 and upper steering pole 2 should be as bigger as it can (Figure 6).

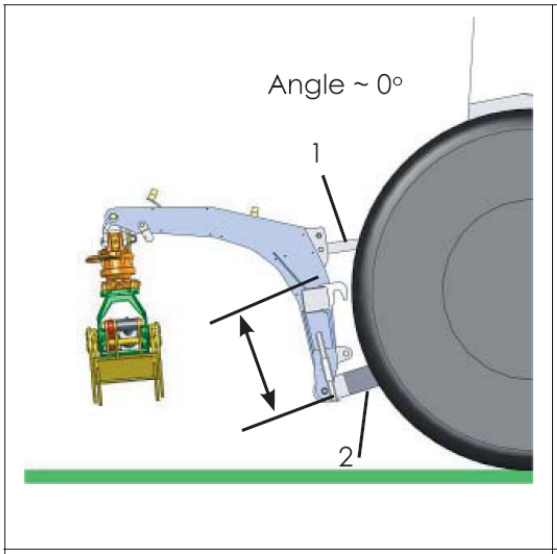

Figure 5: Parallel installation of a tractor arms and control pole

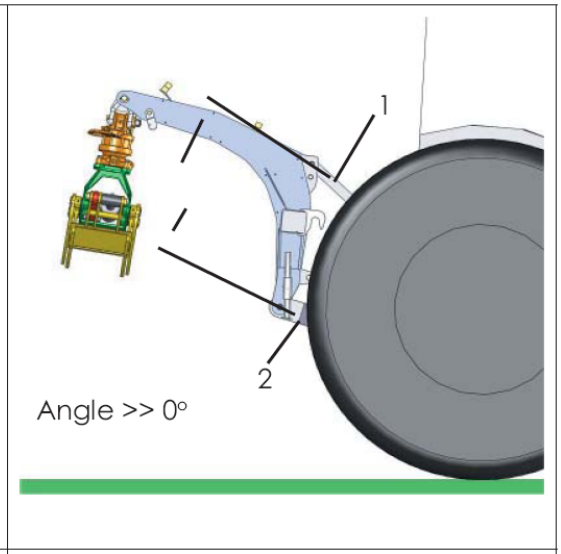

Figure 6: Installation of the tractor arms and control pole with an angle

9.3 *Pulling trunks*

When using pliers for pulling trunks, it is always necessary first to remove bolt for protection during the transport. The pulling process you can perform on the following ways (Figure 7) and (Figure 8).

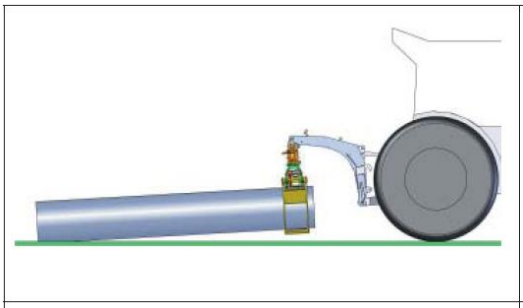

Figure 7: Pulling the trunk – less loading of the tractor

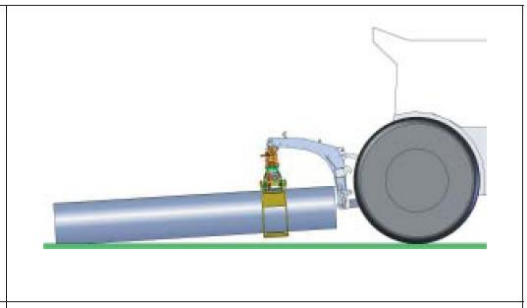

Figure 8: Pulling the trunk – higher loading of the tractor

Dragging trunks on the slope always perform by pulling perpendicular to the slope (Figure 9). Otherwise, it can come to a tractor roll.

ATTENTION! ⚠

With the pliers it is prohibited pushing the trunks (Figure 10). Risk of plier's injury and danger of uncontrolled roll of trunks. The cause of damage on the pliers it is possible unambiguously to identify and for the damage the manufacturer does not guarantee.

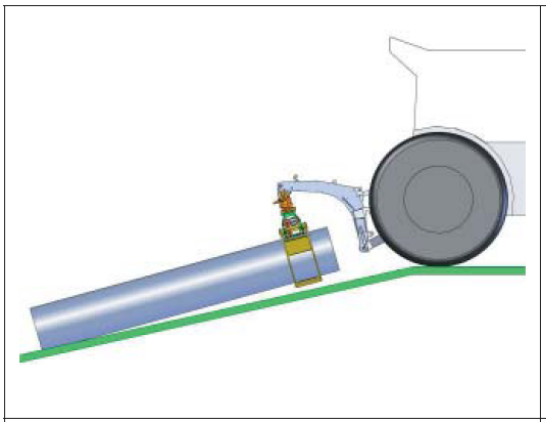

Figure 9: Extraction of the trunks on the slope

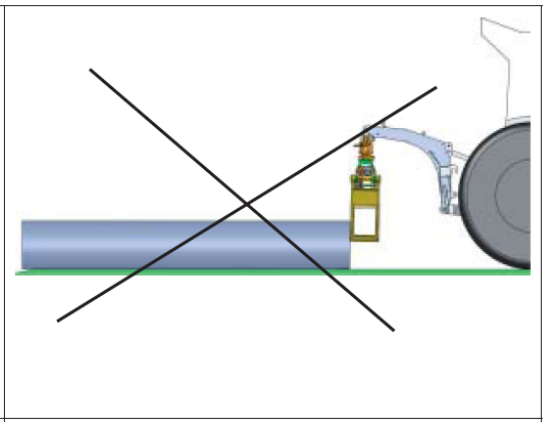

Figure 10: Prohibited use of pliers for pushing the trunks

9.4 *Carrying trunks and loading*

When loading or carrying logs the clevis pin for the protection of load during transport must be removed first. Logs can be carried only as shown in the figure below (figure 11) and with a maximum speed of 7 km/h.

If load is carried as shown in figure 11, the maximum load is 600 kg and the maximum allowed log length is 4 m. If the load is towed or lifted perpendicular to the tractor, the maximum load of the tractor must be observed (figure 11a).

Model	Max. load
1300 F	1500 kg
1800 F	2500 kg

Due to the weight of the equipment and the load, the combination tractor-equipment can become unstable.

In both cases, the min. load of the tractor's front axle must be 20 % of the tractor's weight. In case of front mounted equipment (front hydraulics, front loader), the min. load of the tractor's rear axle must be 45 % of the tractor's weight.

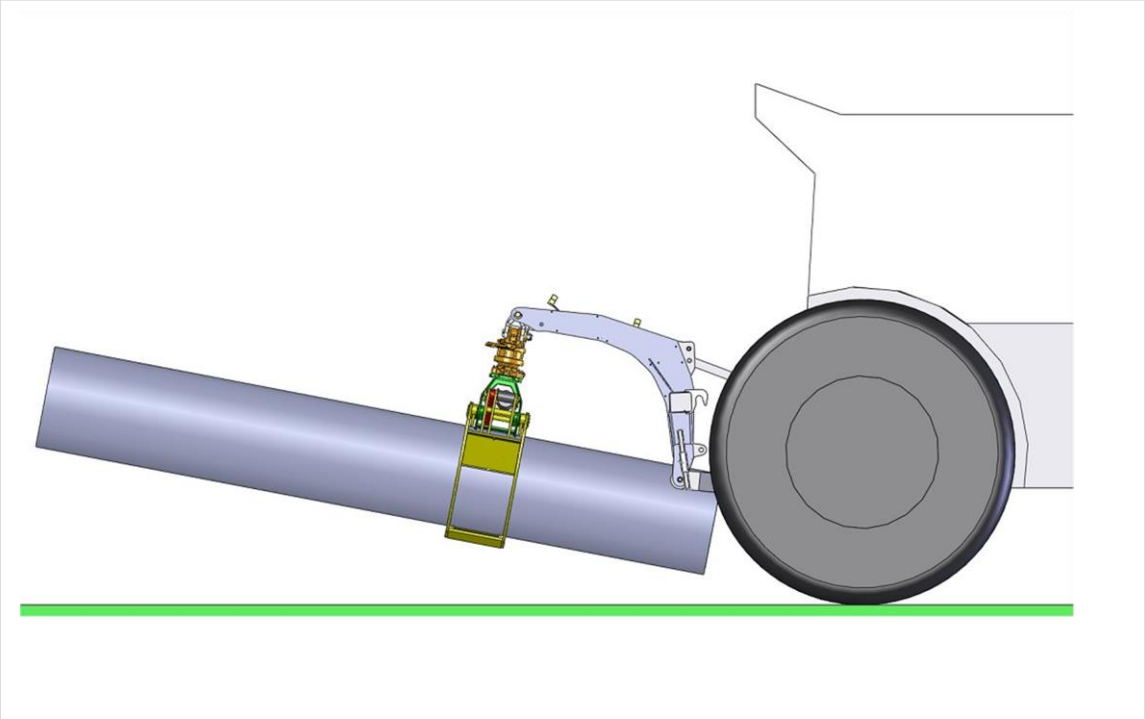

Figure 11: The correct way of wearing thick - maximum speed of up to 7km / h

The necessary min. ballast weight can be calculated using the following formula:

Calculating the front ballast weight:

$$I_{F,min} = \frac{\left(I_R \times (c+d)\right) - (T_F \times b) + (0,2 \times T_E \times b)}{a+e+b}$$

Calculating the rear ballast weight:

$$I_{R,min} = \frac{\left(I_F \times (a+e)\right) - (T_R \times b) + (0,45 \times T_E \times b)}{b+c+d}$$

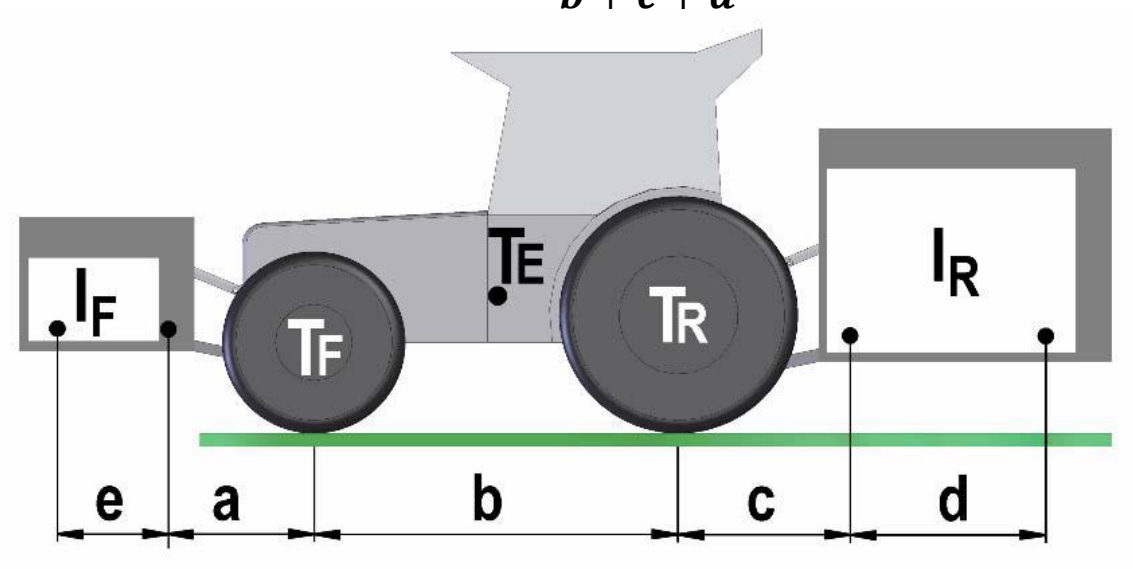

Legend			
TE	(kg)	Weight of unladen tractor	**1**
TF	(kg)	Front axle load of an unladen tractor	**1**
TR	(kg)	Rear axle load of an unladen tractor	**1**
IR	(kg)	Total weight of rear mounted equipment/rear ballast weights	**2**
IF	(kg)	Total weight of front mounted equipment/front ballast weight	**2**
a	(m)	Distance between the center of the front axle and the center of the front coupling balls	**1,3**
b	(m)	Tractor wheelbase	**1,3**
c	(m)	Distance between the center of the rear axle and the center of the coupling balls	**1,3**
d	(m)	Distance between the center of the coupling balls and the center of gravity of rear mounted equipment/rear ballast weights (d = 0 m)	
e	(m)	Distance between the center of the coupling balls and the center of gravity of front mounted equipment/front ballast weights (e = 0,4 m)	

1. See instruction for use of the tractor.
2. See instructions for use of the equipment.
3. Measure.

10. Maintenance and care

ATTENTION!
After 6-8 operating hours the screws on a revolving rotor or on a rotor of flange should be tighten.

Moving parts of the machine are equipped with Oilers, which should be according to load and use, oiled every 4 weeks.

Lubrication is performed regularly.

EC – Declaration of conformity
pursuant to the EC Directive 2006/42/EC

We

UNIFOREST d.o.o.

Latkova vas 81d,
3312 PREBOLD, SLOVENIA

Mr. Marko Polak, BA, Uniforest, Latkova vas 81d, 3312 PREBOLD

Are declaring with full responsibility that the product:

LOG GRIPS
SCORPION
1300 FL / 1800 F / 1800 BC

is meeting all basic safety and health requirements of the EC directive 2006/42/EC.

The following standards and / or technical regulations were used in order to appropriately implement the above mentioned safety and health requirement of the EC directives:

EN ISO 12100/2013 EN ISO 13857/2008
EN ISO 4254-1 2013 EN ISO 4413/2011

Prebold, 10. 09. 2020

Marko Polak

UNIFOREST d.o.o.
Dobriša vas 14a, SI-3301 Petrovče / 2

SPARE PARTS LIST

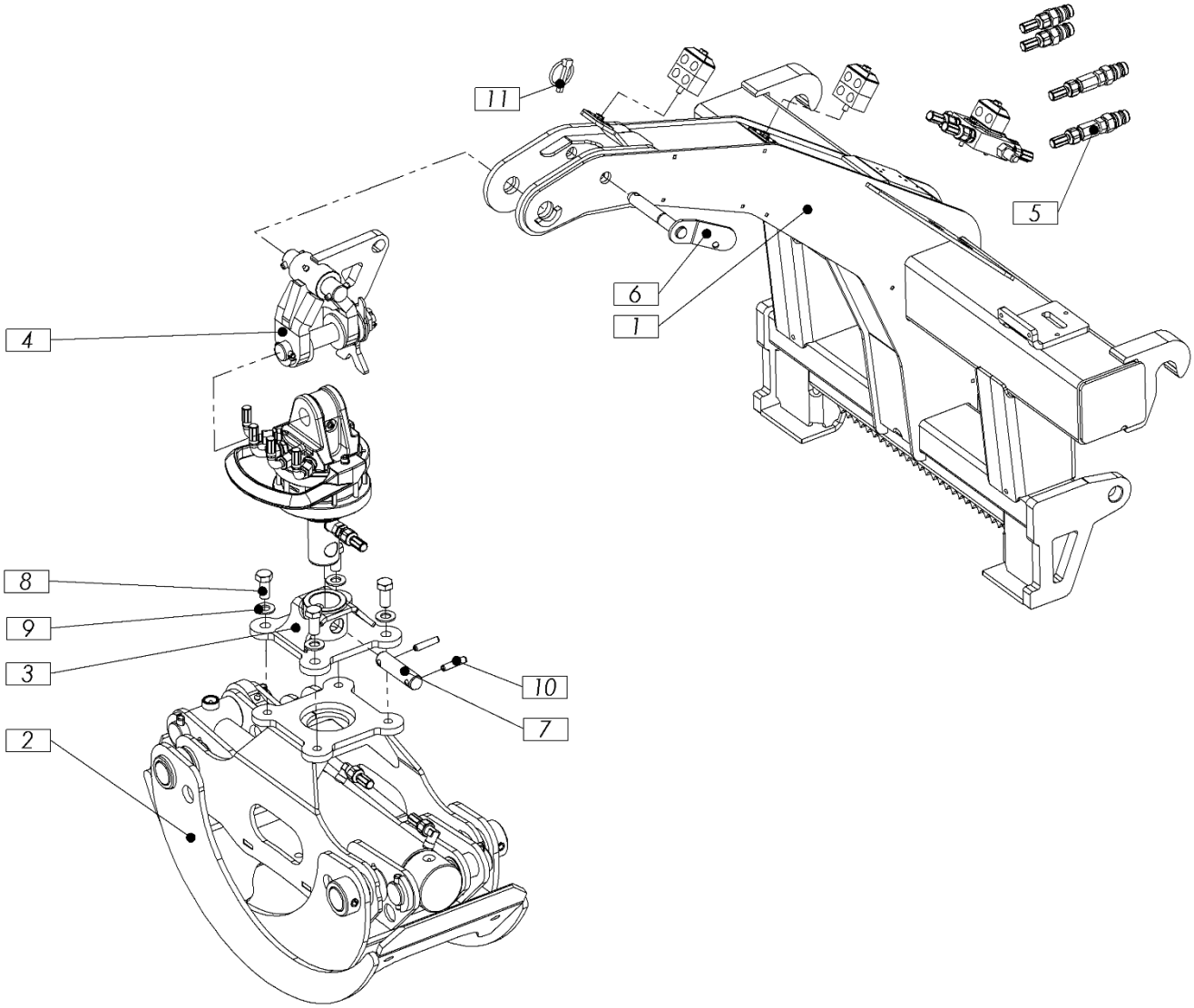

Figure 1: 202.00.00.0 - Scorpion 1300FL

Pos.	Name	No. of pieces	Number
1	HITCH VAR. SCORPION 1300FL	1	202.01.00.0
2	Grabs 1300pro kpl.	1	202.05.00.A
3	Flange var.	1	202.05.33.0
4	Grab pendulum 1300 kpl	1	202.07.00.0
5	Hydraulics Scorpion 1300F	1	202.08.00.0
6	Bolt var.	1	201.01.21.A
7	Bolt	1	202.04.05.0
8	Screw M16x35 Zn	4	1000109
9	Washer M16 SKM	4	1000177
10	Spring latch 10x45	2	1000219
11	Tractor pin 10	1	1000211

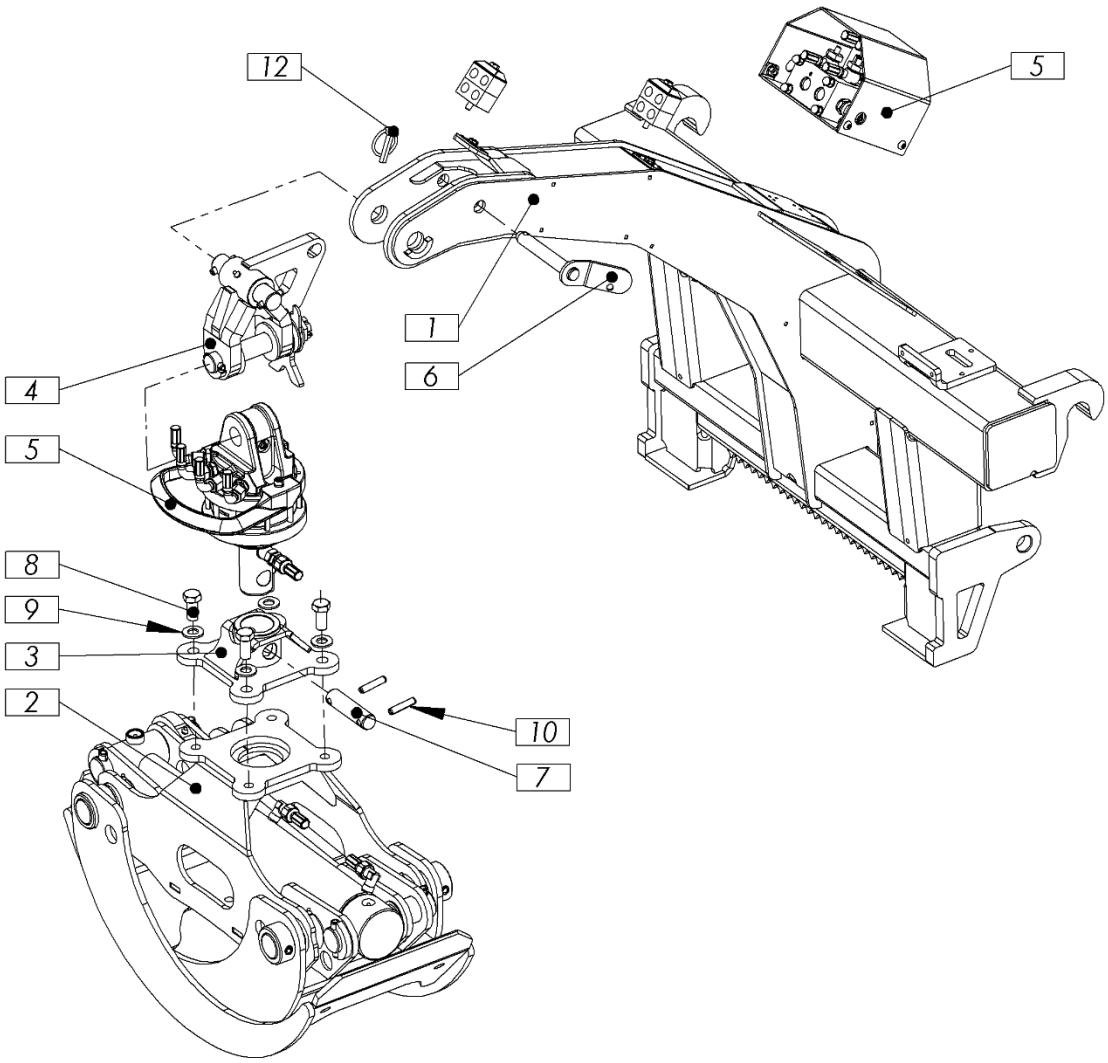

Figure 2: 202.50.00.0 - Scorpion 1300FL with a valve

Pos.	Name	No. of pieces	Number
1	HITCH VAR. SCORPION 1300FL	1	202.01.00.0
2	Grabs 1300pro kpl.	1	202.05.00.A
3	Flange var.	1	202.05.33.0
4	Grab pendulum 1300 kpl	1	202.07.00.0
5	Hydraulics Scorpion 1300F + VALVE	1	202.08.20.0
6	Bolt var.	1	202.01.21.0
7	Bolt	1	202.04.05.0
8	Screw M16x35 Zn	4	1000109
9	Washer M16 SKM	4	1000177
10	Spring latch 10x45	2	1000219
11	Grease fitting M8x1	1	1000234
12	Tractor pin 10	1	1000211

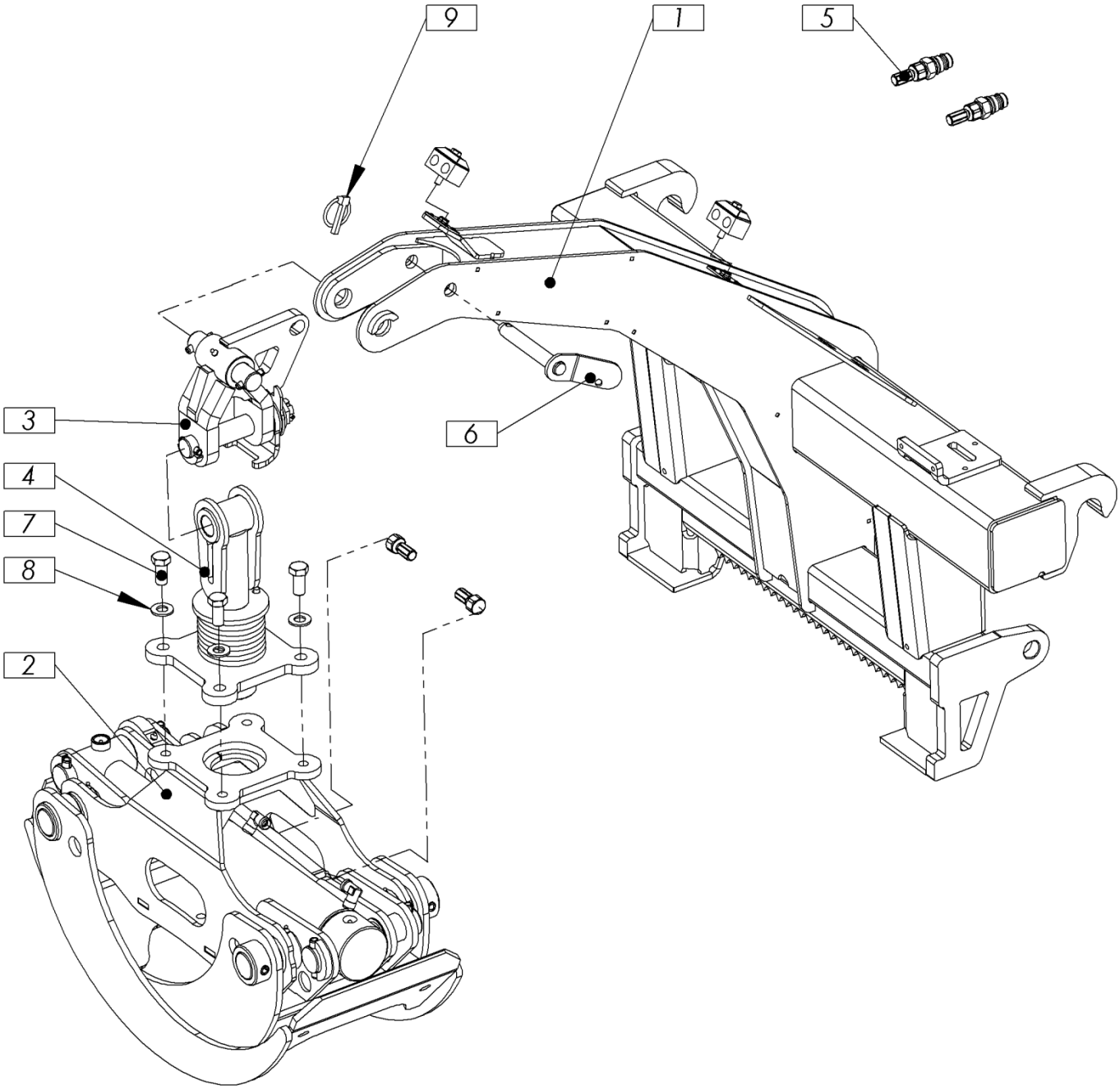

Figure 3: 202.51.00.0 - Mechanical rotator Scorpion 1300FL

Pos.	Name	No. of pieces	Number
1	HITCH VAR. SCORPION 1300FL	1	202.01.00.0
2	Grabs 1300pro kpl.	1	202.05.00.A
3	Grab pendulum MR 1300 kpl	1	202.07.10.0
4	Manual rotator kpl.	1	201.09.00.A
5	Hydraulics Scorpion 1300F mech. rot.	1	202.08.40.0
6	Bolt var.	1	202.01.21.0
7	Screw M16x35 Zn	4	1000109
8	Washer M16 SKM	4	1000177
9	Tractor pin 10	1	1000211

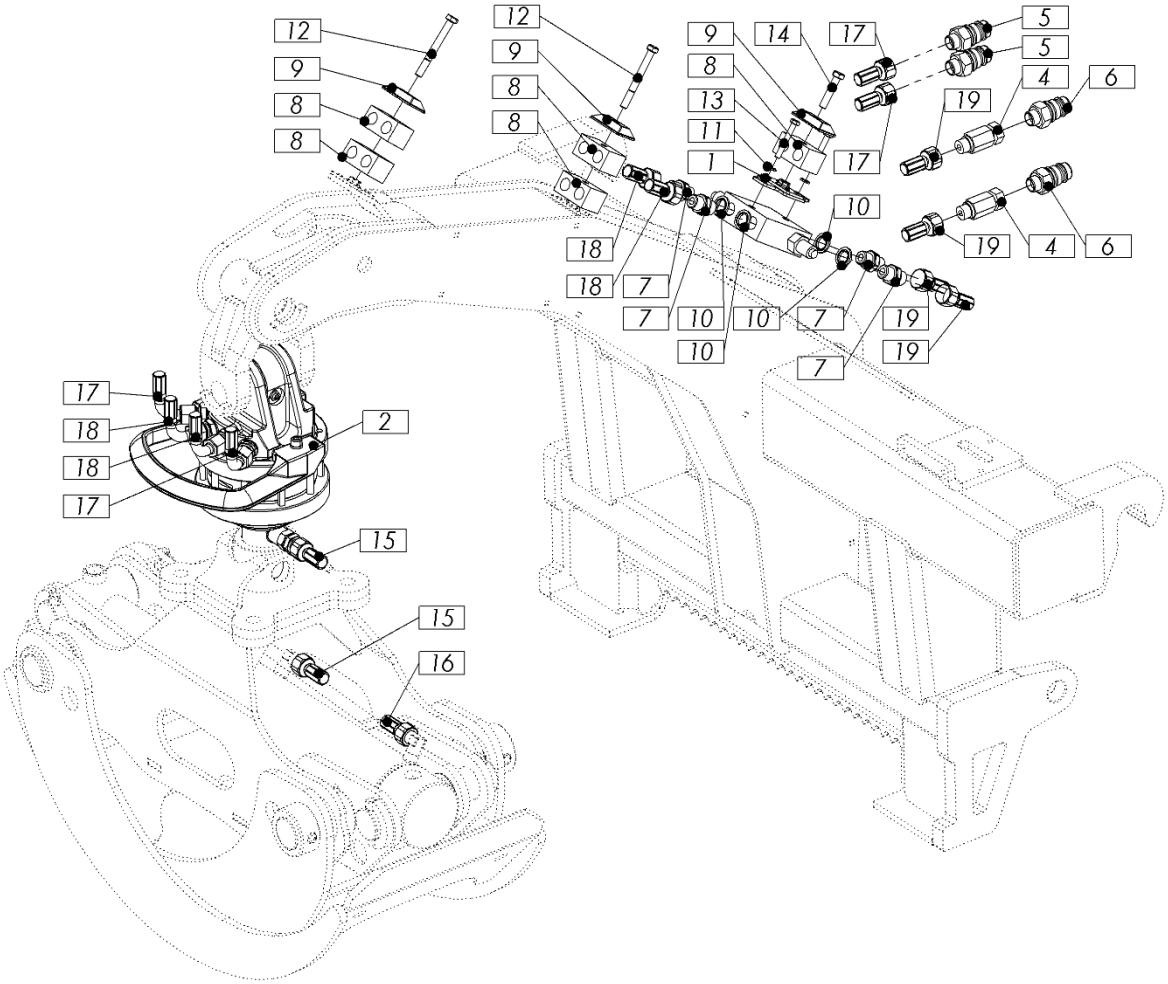

Figure 4: 202.08.00.0 - Hydraulics Scorpion 1300FL

Pos.	Name	No. of pieces	Number
1	Hyd. hose holder plate	1	205.08.03.0
2	Rotator gr 30	1	1003277
3	VALVE	1	1009569
4	VALVE	2	1000676
5	Quick hyd. coupling 22 x 1,5 Z.M - DNP	2	1000661
6	Quick hyd. coupling 3/8" N.M-DNP	2	1000813
7	CONNECTION HYD. 6HMK4 3/8-3/8	4	1000593
8	Hose connection	5	1000667
9	Upper plate	3	1009620
10	Washer hid USIT 17,28 / 23,8 - 2,03 (3/8")	4	1000659
11	Washer M6 Zn	2	1000168
12	Screw M8x75 Zn	2	1000880
13	Screw M6x40 Zn	2	1019213
14	Screw M8x40 Zn	1	1009806
15	HOSE HYD. 2SN DN08 500M-18/A-3/8" (1300)"	1	1001133
16	HOSE HYD. 2SN DN08 700M-18/A-3/8"	1	1000730
17	HOSE HYD. 2SN DN08 2700 M-18/A-90-3/8"	2	1000609
18	HOSE HYD. 1SN DN08 1120 A-3/8"_A-90-3/8"	2	1026402
19	HOSE HYD. 1SN DN08 1380 MBSP 3/8_A-3/8"	2	1026405

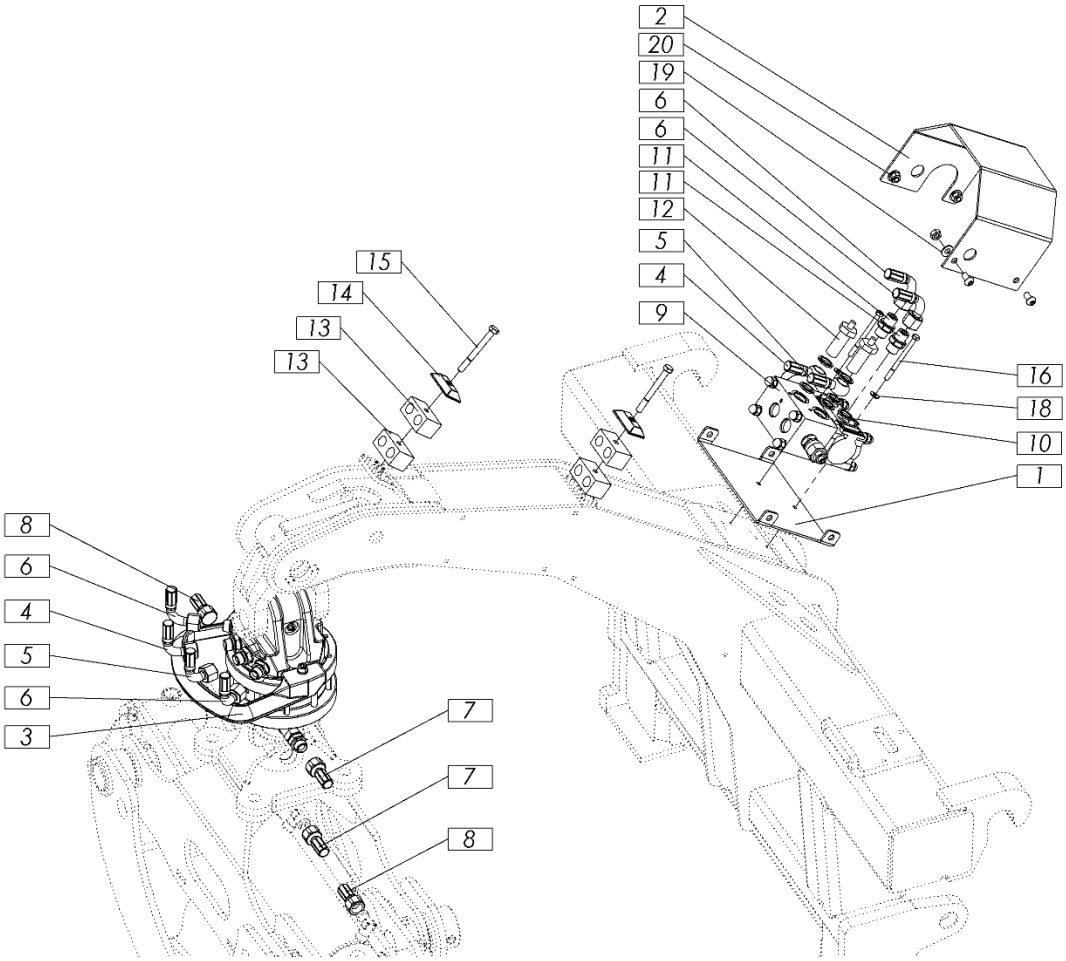

Figure 5: 202.08.20.0 - Hydraulics Scorpion 1300 + valve

Pos.	Name	No. of pieces	Number
1	Valve cover bottom	1	202.08.01.0
2	Valve cover	1	202.08.03.0
3	Rotator GR 30	1	1003277
4	HOSE HYD. 1SN DN08 1160 B-3/8_A-90-3/8"	1	1026637
5	HOSE HYD. 1SN DN08 1190 B-3/8_A-90-3/8"	1	1026794
6	HOSE HYD. 1SN DN08 1310 A-90-3/8"_A-90-3/8"	2	1026638
7	HOSE HYD. 2SN DN08 500M-18/A-3/8" (1300)"	1	1001133
8	HOSE HYD. 2SN DN08 700M-18/A-3/8"	1	1000730
9	Valve KVH-6/2-6-12DC1/2+VP-KVH-VS30 LEVI	1	1026908
10	Washer hid USIT 17,28 / 23,8 - 2,03 (3/8")	8	1000659
11	CONNECTION HYD. 6HMK4 3/8-3/8	2	1000593
12	Hollow screw with damper 3/8" R1361"	2	1000741
13	Hose connection	4	1000667
14	Upper plate	2	1009620
15	Screw M8x75 Zn	2	1000880
16	Screw M6x70 Zn	2	1021660
17	Hexagon screw M8x16	4	1006450
18	Washer M6 SKM	2	1000175
19	Washer M8 SKM	4	1009844
20	Nut M8 Zn	4	1003735

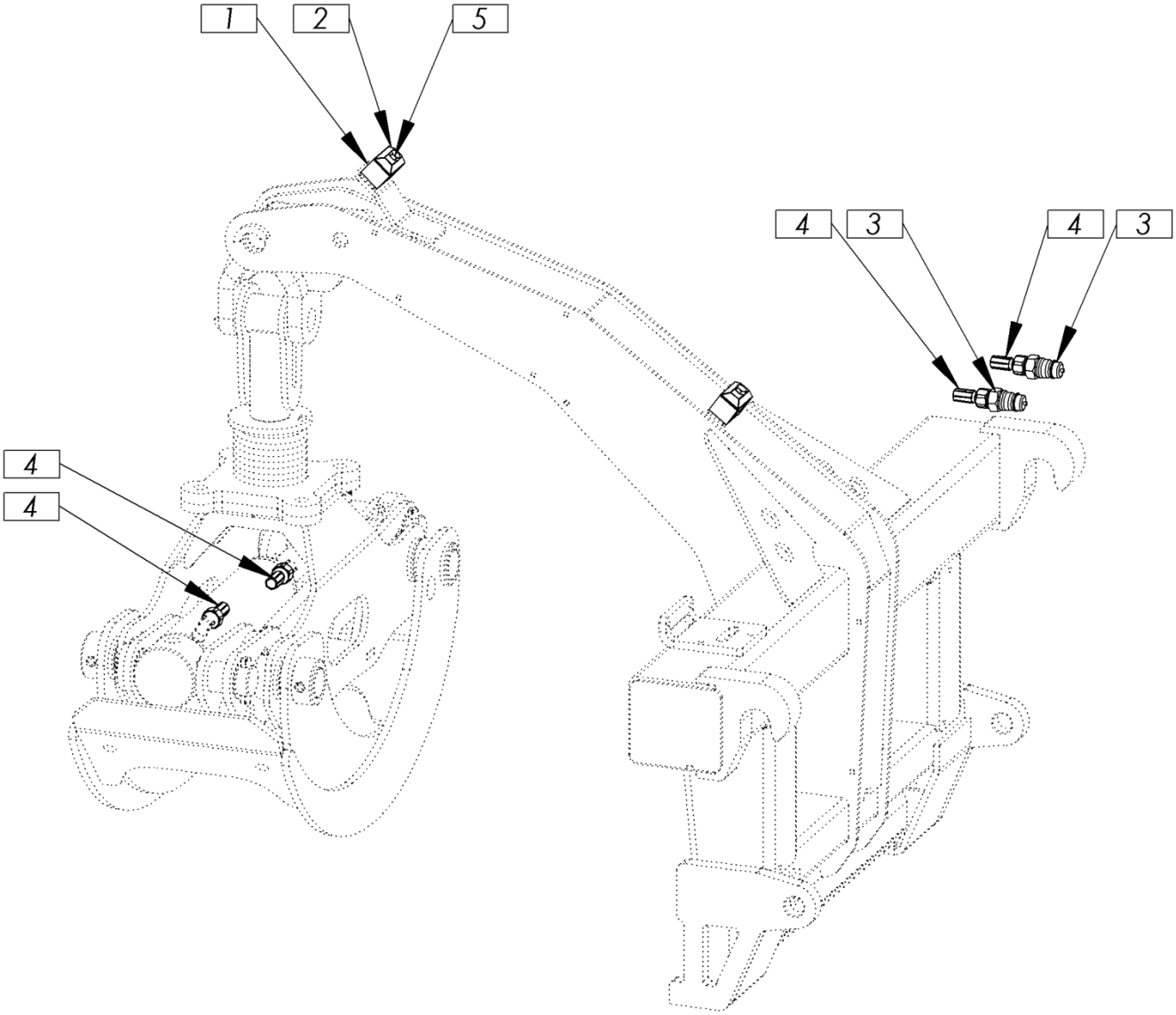

Figure 6: 202.08.40.0 - Hydraulics Scorpion 1300FL mechanical rotator

Pos.	Name	No. of pieces	Number
1	Hose attachment 2D 215/15 PP	2	1000667
2	UPPER PLATE CF2	2	1009620
3	QUICK COUPLING HYD. 18x1,5 Z.M - DNP	2	1000738
4	HYD. HOSE 2SN DN08 2600 M-18/M-18	2	1019265
5	Screw M8x50 Zn	2	1012621

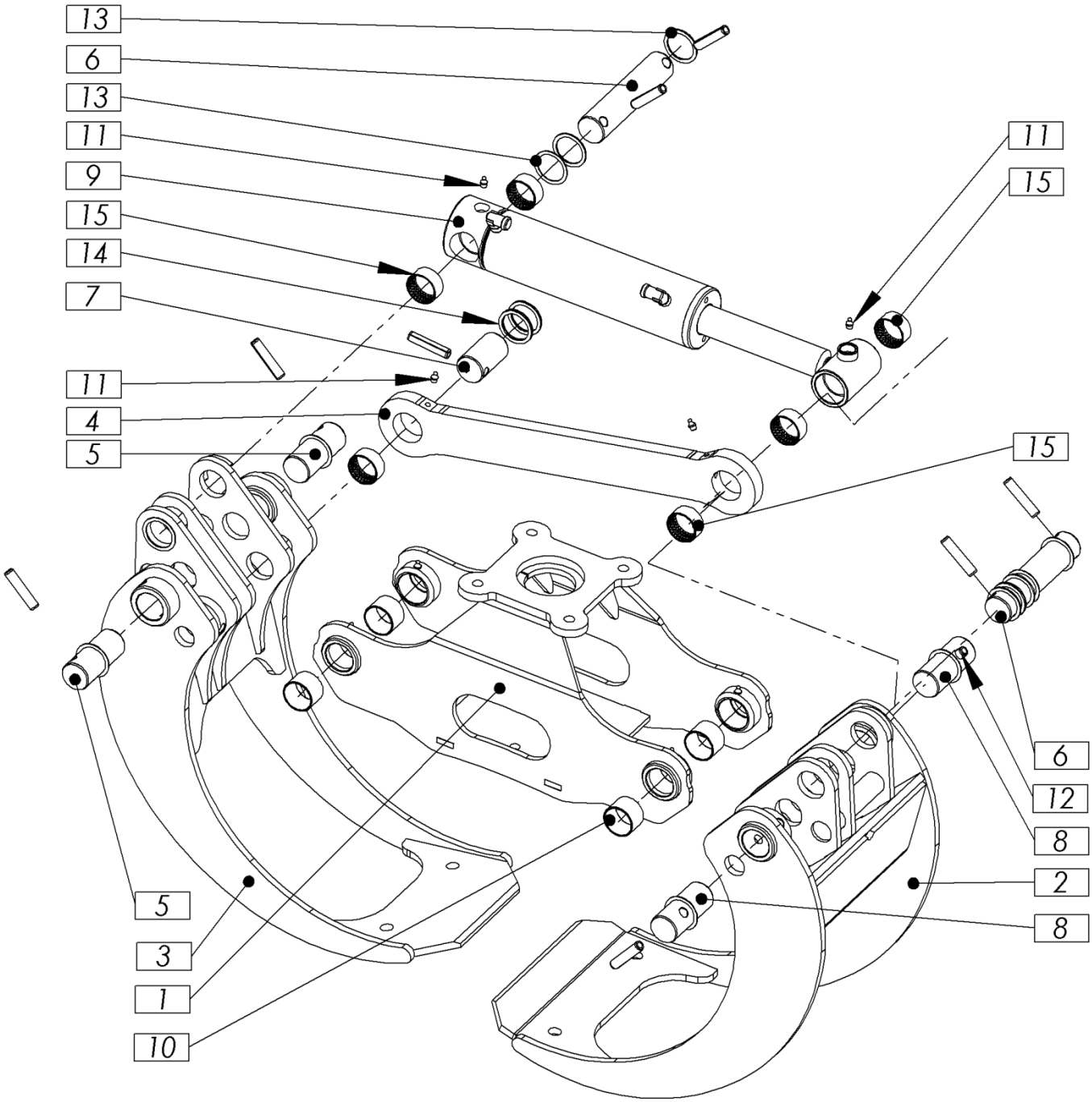

Figure 7: 202.05.00.A - Grabs 1300pro kpl

Pos.	Name	No. of pieces	Number
1	Grab frame var.	1	202.05.07.A
2	Outer jaw var.	1	202.05.15.A
3	Inner jaw var.	1	202.05.20.A
4	Link	1	210.05.21.0
5	Bolt 10	2	202.05.23.0
6	Bolt 11	2	202.05.24.0
7	Bolt 12	1	202.05.25.0

8	Bolt 13	2	202.05.26.0
9	Cylinder 75-40-231	1	202.05.30.0
10	Bushing BK40X44X30	4	1016942
11	Grease fitting M8x1	8	1000234
12	Spring latch 13x60	9	1000220
13	Washer 40x50x1	16	1000190
14	Washer 40x50x2	6	1000705
15	SELF-LUBRICATING SLIDING BUSHING 40/44X20 PAP	6	1000908
16*	Gasket kit cylinder 1300	1	1010751

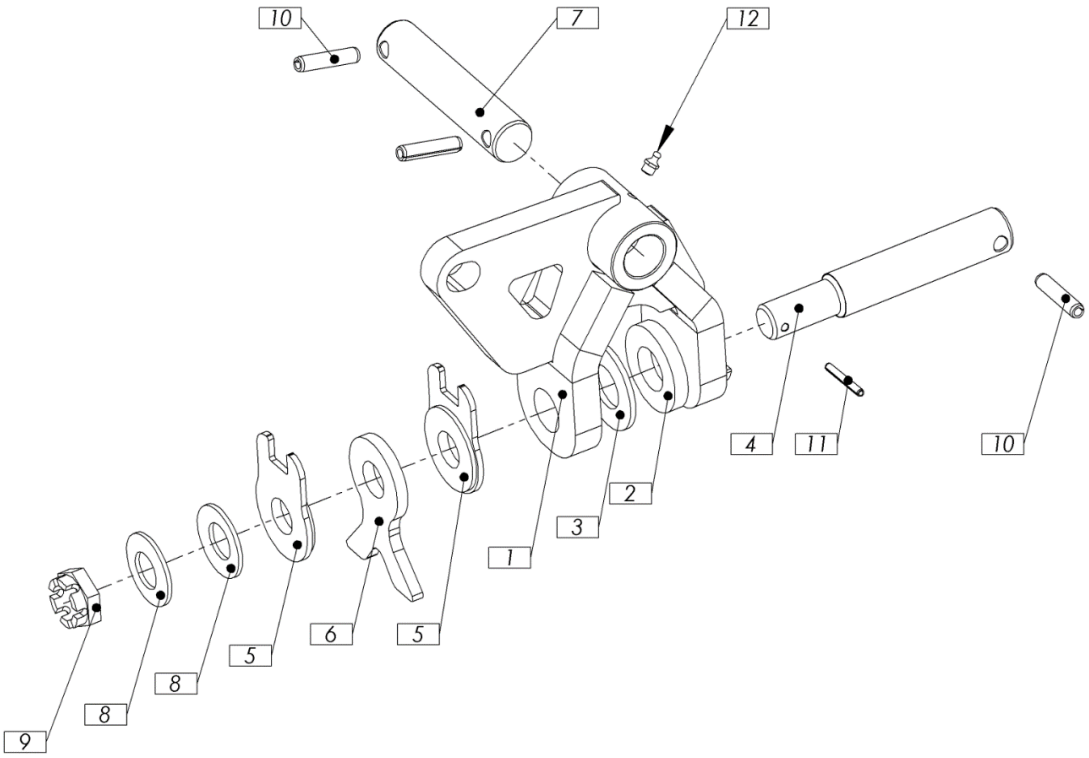

Figure 8: 202.07.00.0 - Grab pendulum 1300 kpl

Pos.	Name	No. of pieces	Number
1	Grab holder var.	1	202.04.00.0
2	Rotator washer 2	1	202.04.04.0
3	Rotator washer 1	1	202.04.03.0
4	Bolt 6	1	201.02.17.0
5	Brake	2	201.10.05.0
6	Hyd. rotor brake	1	201.10.06.0
7	Bolt 1	1	202.02.16.0
8	Disc spring 50x25,4x3	2	1000253
9	NUT M 24 CASTELLATED	1	1018685
10	Spring latch 10x45	3	1000219
11	Spring latch 5x40	1	1000224
12	Grease fitting M8x1	1	1000234

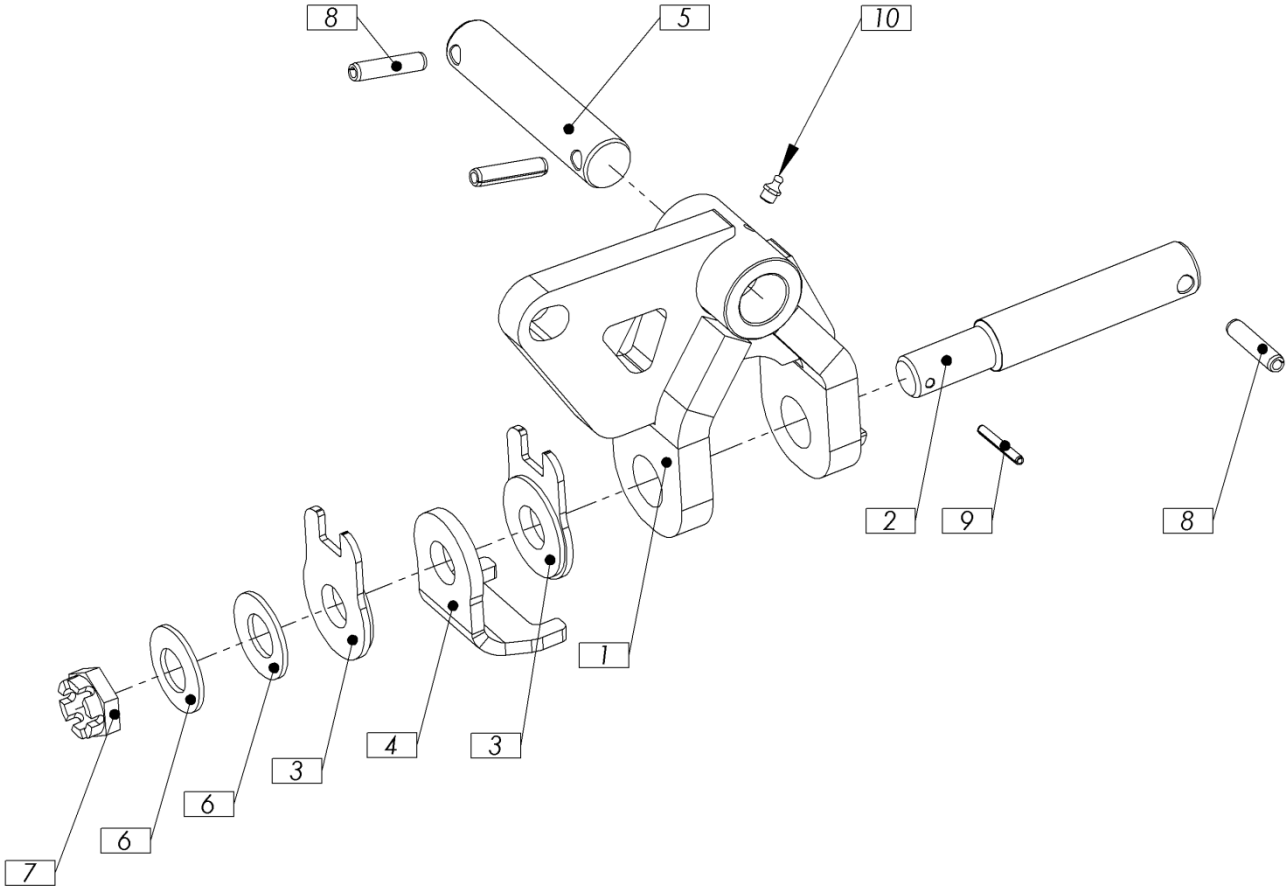

Figure 9: 202.07.10.0 - Grab pendulum MR 1300 kpl

Pos.	Name	No. of pieces	Number
1	Grab holder var.	1	202.04.00.0
2	Bolt 6	1	201.02.17.0
3	Brake	2	201.10.05.0
4	Man. rotor brake	1	201.10.07.0
5	Bolt 1	1	202.02.16.0
6	Disc spring 50x25,4x3	2	1000253
7	NUT M 24 CASTELLATED	1	1018685
8	Spring latch 10x45	3	1000219
9	Spring latch 5x40	1	1000224
10	Grease fitting M8x1	1	1000234

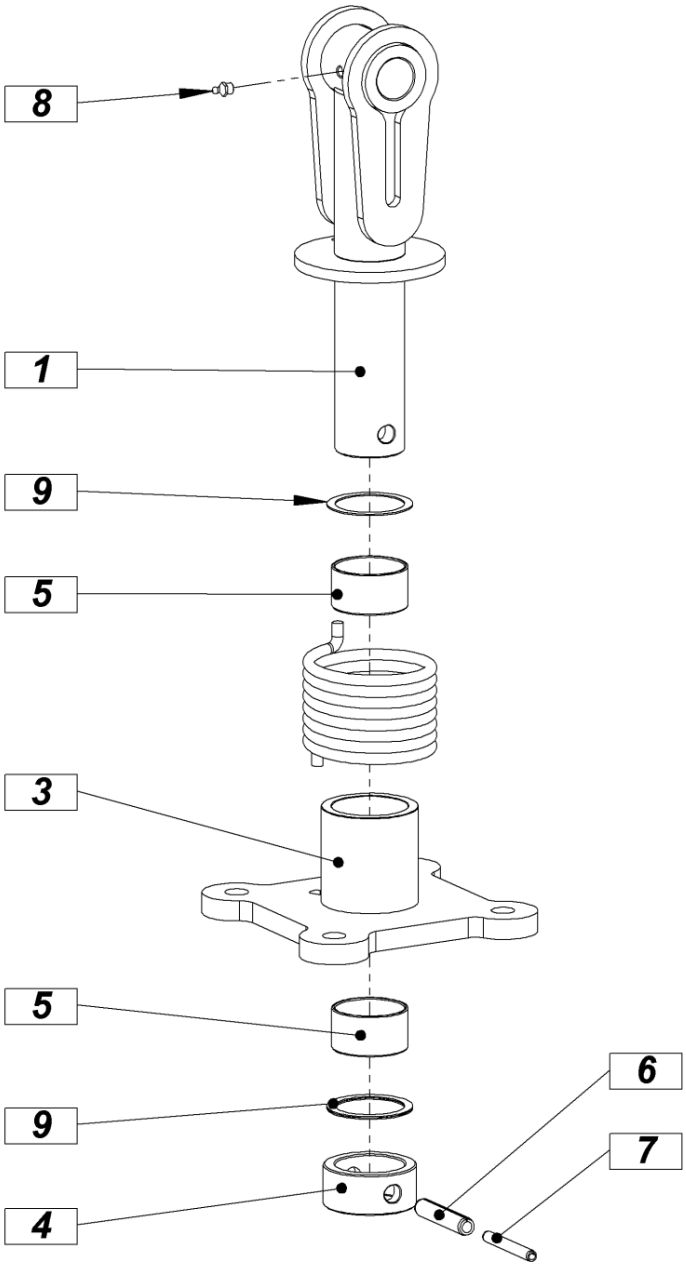

Figure 10: 201.09.00.A - Mechanical rotator kpl

Pos.	Name	No. of pieces	Number
1	Carrying bolt var.	1	201.09.01.A
2	Torsion spring	1	201.09.07.0
3	Flange var.	1	201.09.08.A
4	Bush	1	201.09.12.A
5	SF1 5030 SFB	2	1000708
6	Spring latch 13x65	1	1000222
7	Spring latch 8x65	1	1000221
8	Grease fitting M8x1	1	1000234
9	Washer 50x62x1 Zn	3	1003544

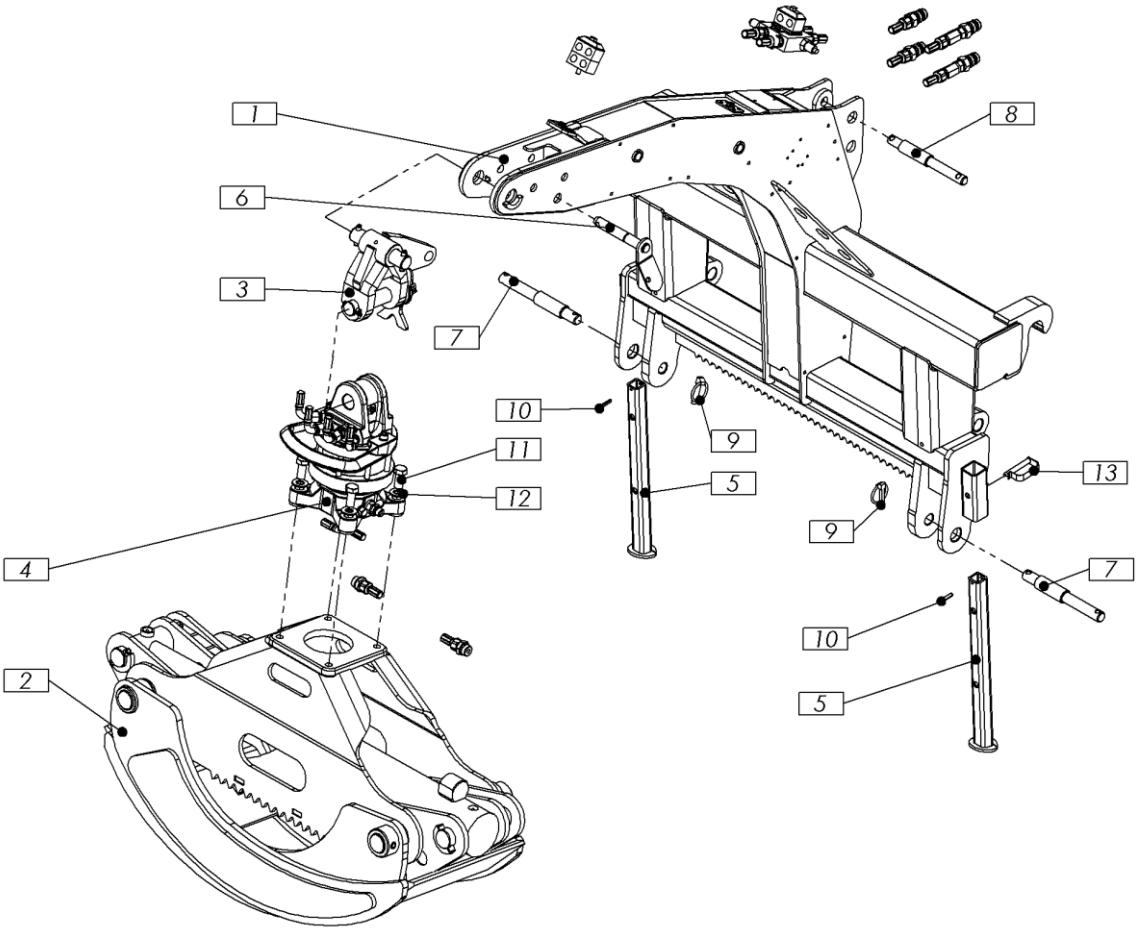

Figure 11: 205.00.00.0 Scorpion 1800F

Pos.	Name	No. of pieces	Number
1	Hitch var. Scorpion 1800F	1	205.01.00.0
2	Grabs kpl.	1	201.05.00.A
3	Grab pendulum 1800 kpl	1	205.07.00.0
4	Hydraulics Scorpion 1800F	1	205.08.00.0
5	Support foot var.	2	205.01.25.0
6	Bolt var.	1	201.01.21.A
7	Lower bolt	2	205.01.29.0
8	Upper bolt	1	205.01.30.0
9	Tractor pin 10	4	1000211
10	Spring latch 6x40	2	1000208
11	Screw M16x35 Zn	4	1000109
12	Washer M16 SKM	4	1000177
13	Spring bolt 10/55	2	1000216

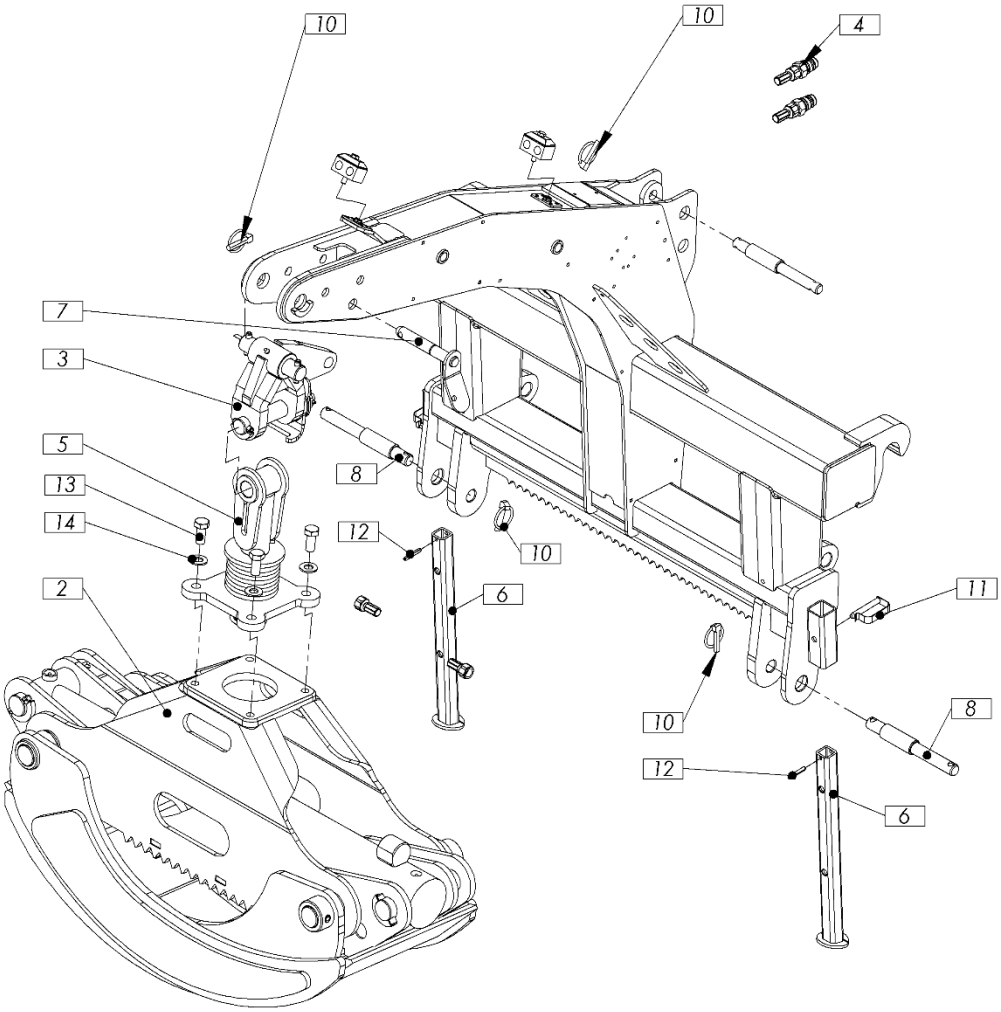

Figure 12: 205.51.00.0 Scorpion 1800F mech. rot.

	Name	No. of pieces	Number
1	Hitch var. Scorpion 1800F	1	205.01.00.0
2	Grabs kpl.	1	201.05.00.A
3	Grab pendulum MR 1800 kpl	1	201.07.10.0
4	Hydraulics Scorpion 1800F mech. rot.	1	205.08.40.0
5	Manual rotator kpl.	1	201.09.00.A
6	Support foot var.	2	205.01.25.0
7	Bolt var.	1	201.01.21.A
8	Lower bolt	2	205.01.29.0
9	Upper bolt	1	205.01.30.0
10	Tractor pin 10	4	1000211
11	Spring bolt 10/55	2	1000216
12	Spring latch 6x40	2	1000208
13	Screw M16x35 Zn	4	1000109
14	Washer M16 SKM	4	1000177

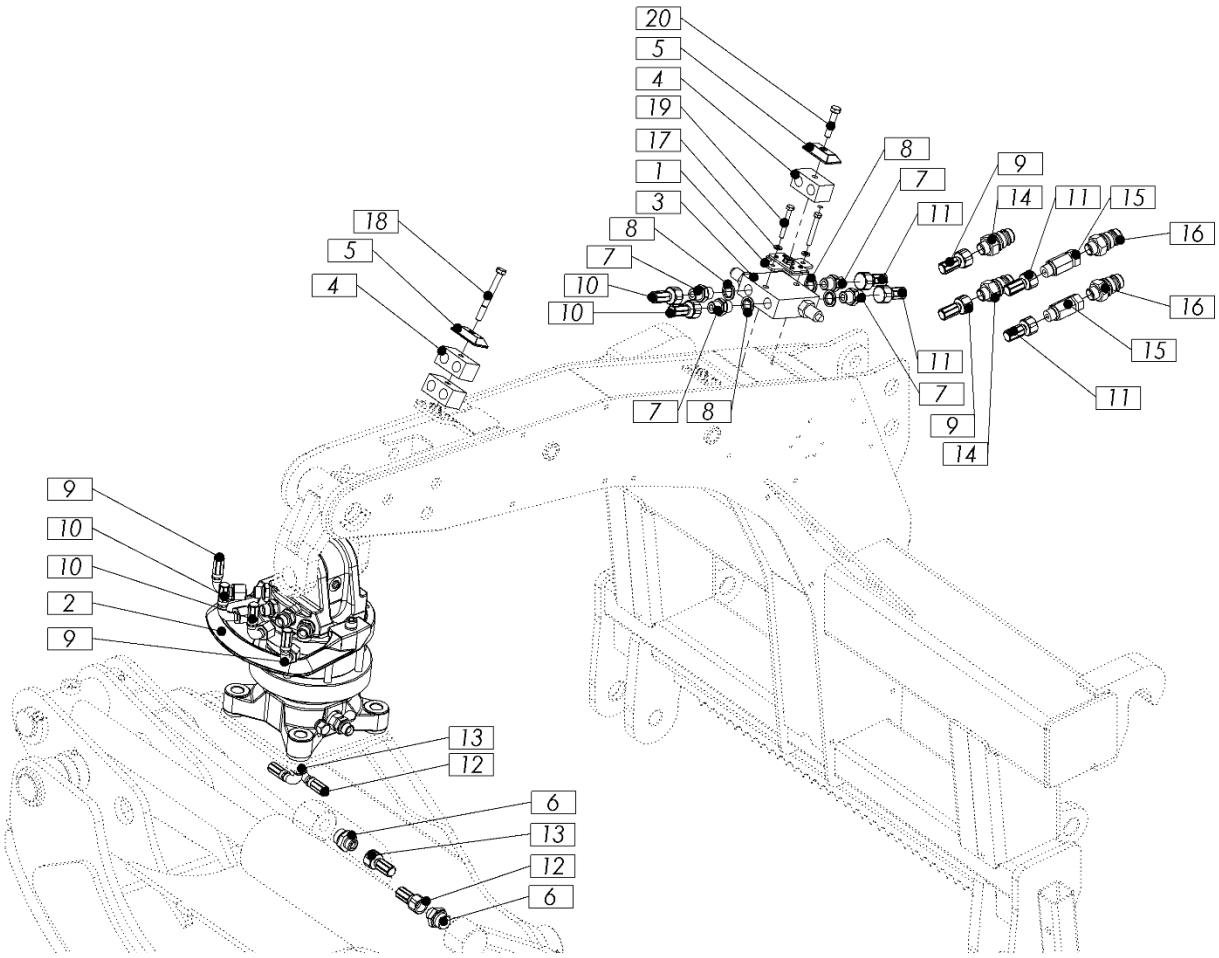

Figure 13: 205.08.00.0 - Hydraulics Scorpion 1800F

Pos.	Name	No. of pieces	Number
1	Hyd. hose holder plate var Zn	1	205.08.03.0
2	Hydraulic rotator GR 465	1	1003283
3	VALVE	1	1009569
4	Hose connection 2D 215/15 PP	3	1000667
5	UPPER PLATE CF2	2	1009620
6	CONNECTION HYD. GE12LR1/2EDOMD	2	1006971
7	CONNECTION HYD. 6HMK4 3/8-3/8	4	1000593
8	Washer hyd. USIT 17,28 / 23,8 - 2,03 (3/8")	4	1000659
9	HOSE HYD. 2SN DN08 2800A-90-3/8"/M-18	2	1000764
10	HOSE HYD. 2SN DN08 1120 A-3/8"_A-90-3/8"	2	1026494
11	HOSE HYD. 1SN DN081450 MBSP 3/8_A-3/8"	2	1026525
12	HOSE HYD. 1SN DN10 770 M-18L_A-90-3/8	1	1022963
13	HOSE HYD. 1SN DN10 450 M-18L_A-90-3/8	1	1022964
14	Quick hyd. coupling 22 x 1,5 Z.M - DNP	2	1000661
15	HYD. NON-RETURN VALVE WITH CHOKE	2	1000676
16	HYD. QUICK COUPLING 3/8" N.M-DNP	2	1000813
17	Washer M6 Zn	2	1000168
18	Screw M8x75 Zn	1	1000880
19	Screw M6x40 Zn	2	1019213
20	Screw M8x40 Zn	1	1009806

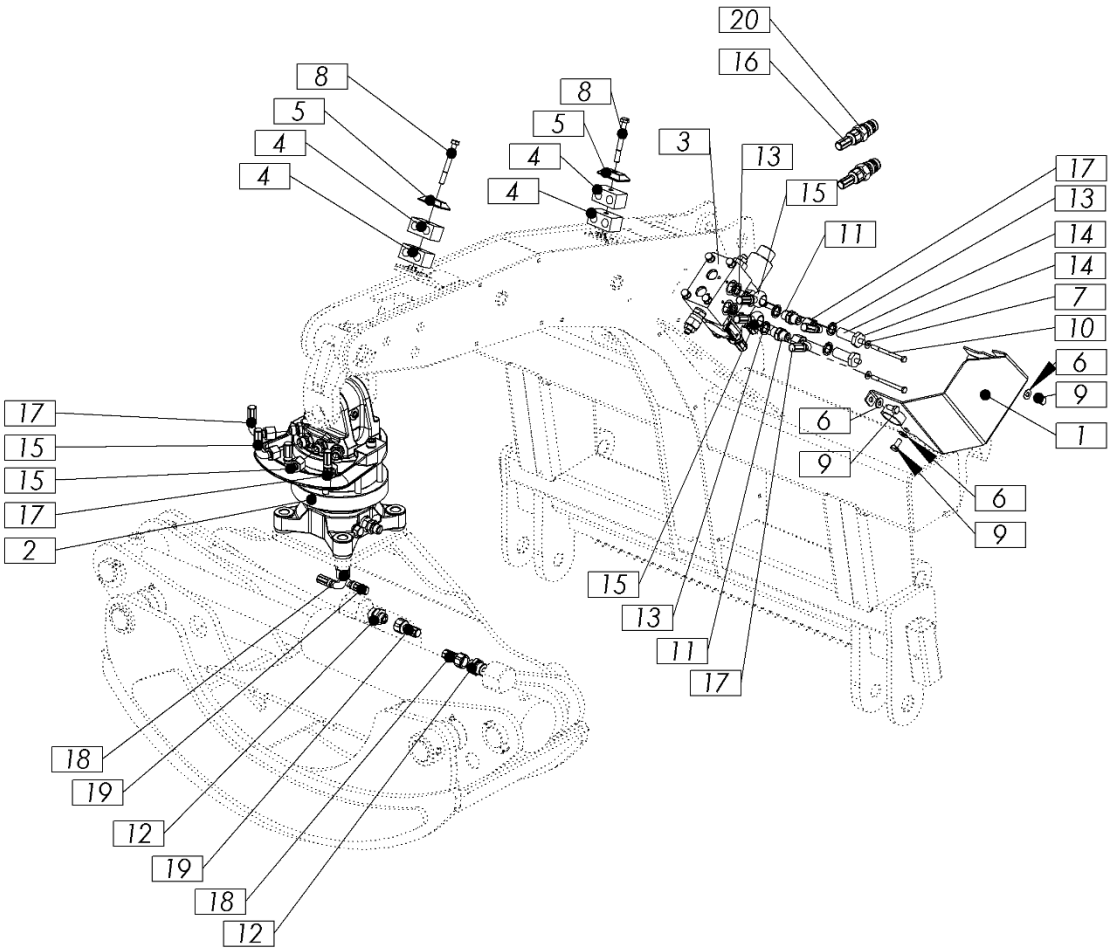

Figure 14: 205.08.20.0 - Hydraulics Scorpion 1800F + valve

Pos.	Name	No. of pieces	Number
1	Valve protection var	1	205.08.07.0
2	Hyd. rotator GR 465	1	1003283
3	VALVE	1	1026908
4	Hose connection	4	1000667
5	UPPER PLATE	2	1009620
6	Washer M8 SKM	3	1009844
7	Washer M6 SKM	2	1000175
8	Screw M8x75 Zn	2	1000880
9	Screw M8x16 Zn	3	1000050
10	Screw M6x70 Zn	2	1021660
11	CONNECTION HYD. 6HMK4 3/8-3/8	4	1000593
12	CONNECTION HYD. GE12LR1/2EDOMD	2	1006971
13	Washer hyd. USIT 17,28 / 23,8 - 2,03 (3/8")	8	1000659
14	HOLLOW SCREW WITH DAMPER 3/8" R1361"	2	1000741
15	HOSE HYD. 1590 B-3/8"-A-90-3/8	2	1013919
16	HOSE HYD. 2SN DN08 1200A-3/8"/A-3/8"	2	1019207
17	HOSE HYD. 1640 A-90-3/8"-A-90-3/8"	2	1013920
18	HOSE HYD. 1SN DN10 770 M-18L_A-90-3/8	1	1022963
19	HOSE HYD. 1SN DN10 450 M-18L_A-90-3/8	1	1022964
20	HYD. QUICK COUPLING 3/8" N.M-DNP	2	1000813

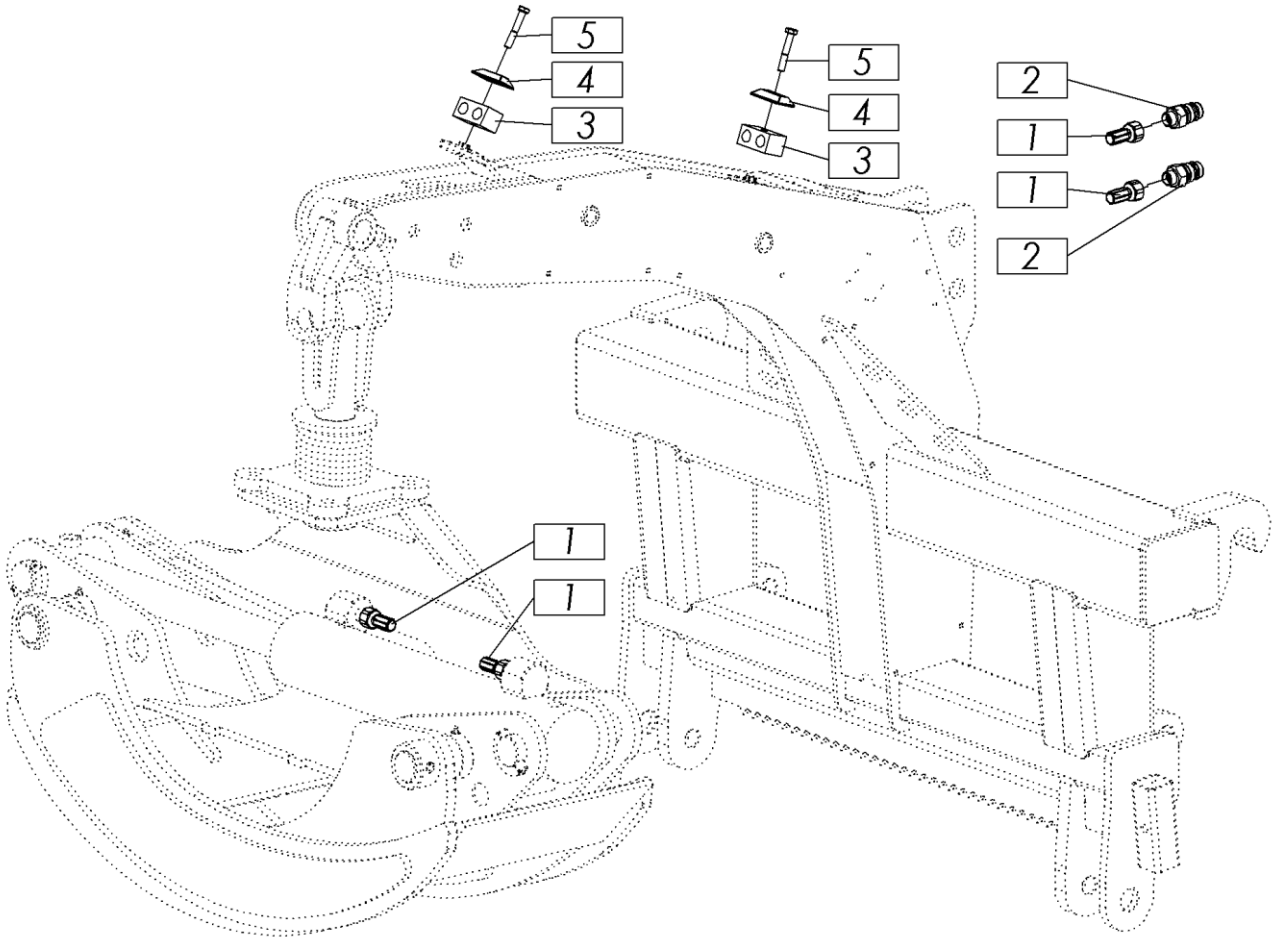

Figure 15: 205.08.40.0 - Hydraulics Scorpion 1800F mechanical rotator

Pos.	Name	No. of pieces	Number
1	HYD. HOSE 2SN DN08 3200 M-18/M-18 (scorpion 1800F)	2	1000768
2	QUICK COUPLING HYD. 18x1,5 Z.M - DNP	2	1000738
3	Hose attachment 2D 215/15 PP	2	1000667
4	UPPER PLATE CF2	2	1009620
5	Screw M8x50 Zn	2	1012621

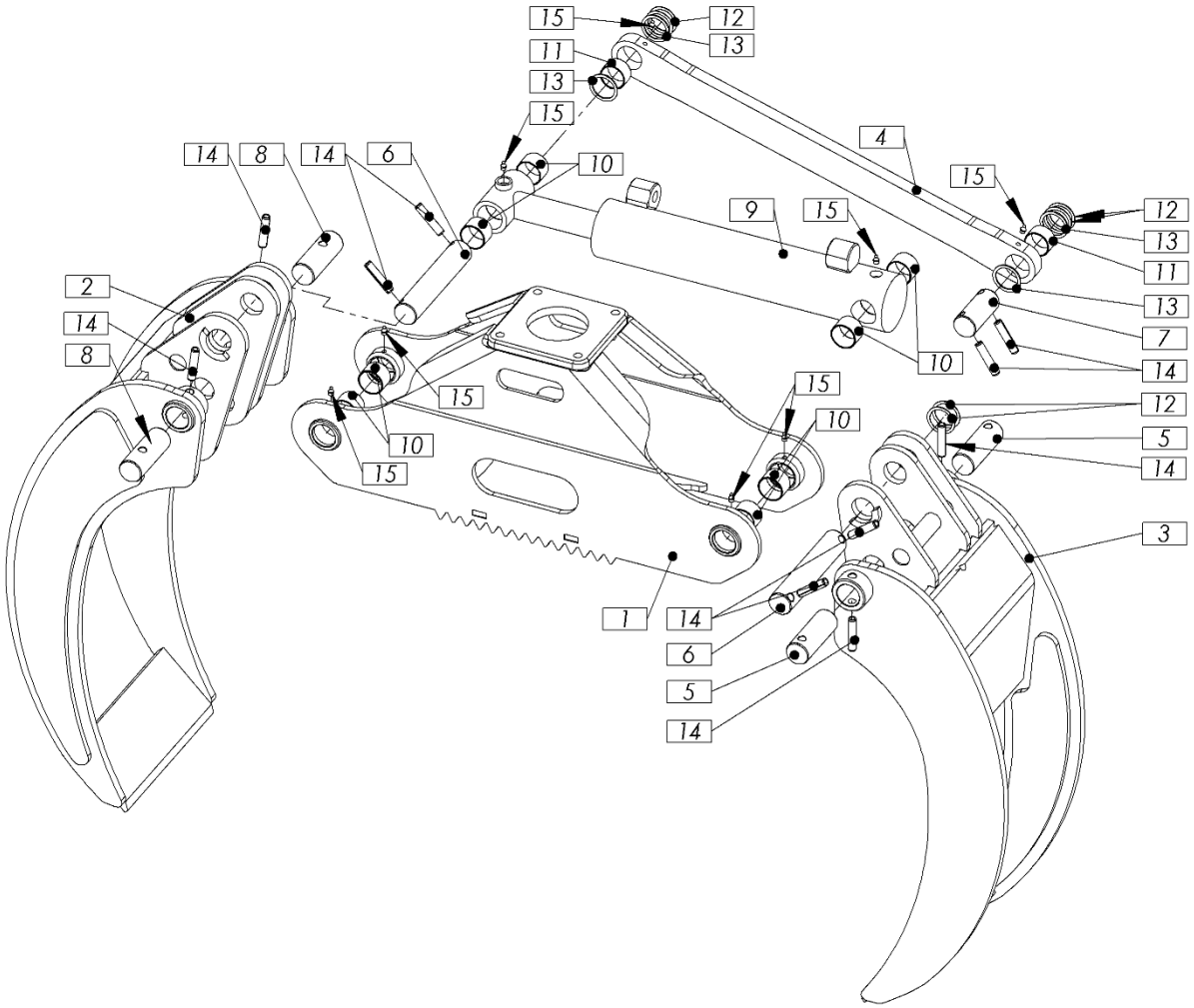

Figure 16: 201.05.00.A - Grabs 1800

Pos.	Name	No. of pieces	Number
1	Tong frame var.	1	201.05.07.A
2	External leg var.	1	201.05.15.0
3	Inner leg var.	1	201.05.20.0
4	Connection	1	201.05.21.0
5	Bolt 10	2	201.05.23.0
6	Bolt 11	2	201.05.24.0
7	Bolt 12	1	201.05.25.0
8	Bolt 13	2	201.05.26.0
9	Cylinder 85/45 - 380	1	201.05.30.A
10	Sleeve BK40X44X30	8	1016942
11	Sleeve BK090 40x44x25	2	1018750
12	Washer 40x50x1	6	1000190
13	Washer 40x50x2	4	1000705
14	Spring pin 13x60	10	1000220
15	Grease fitting M8x1	8	1000234
16*	Cylinder seal kit 1800	1	1010753

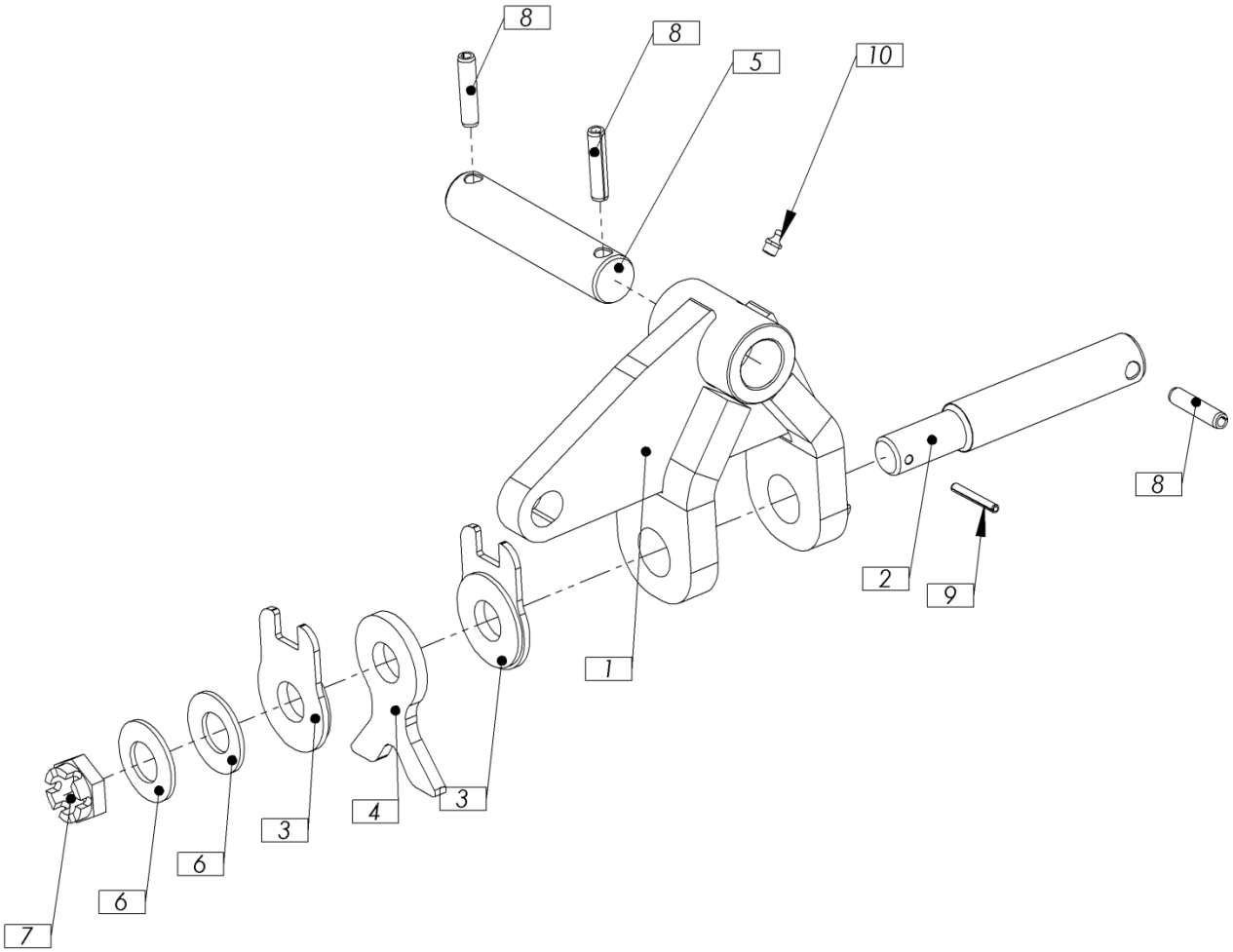

Figure 17: 201.07.00.0 - Grab pendulum 1800 kpl

Pos.	Name	No. of pieces	Number
1	Grab holder var.	1	201.04.00.A
2	Bolt 6	1	201.02.17.0
3	Brake	1	201.10.05.0
4	Hyd. rotor brake	1	201.10.06.0
5	Bolt 1	2	202.02.16.0
6	Disc spring 50x25,4x3	2	1000253
7	NUT M 24 CASTELLATED	1	1018685
8	Spring latch 10x45	2	1000219
9	Spring latch 5x40	1	1000224
10	Grease fitting M8x1	8	1000234

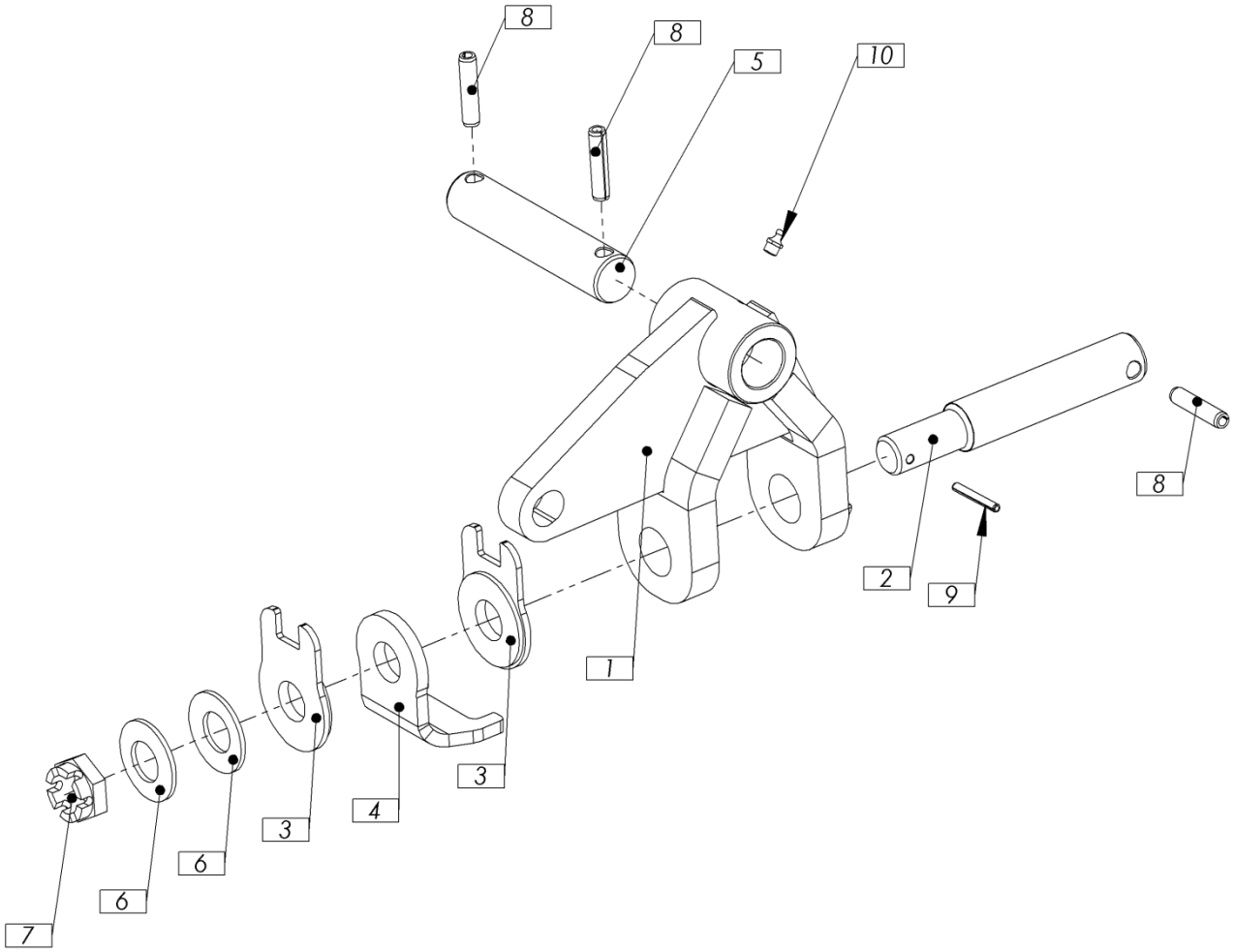

Figure 18: 201.07.10.0 - Grab pendulum MR 1800 kpl

Pos.	Name	No. of pieces	Number
1	Grab holder var.	1	201.04.00.A
2	Bolt 6	1	201.02.17.0
3	Brake	2	201.10.05.0
4	Man. rotor brake	1	201.10.07.0
5	Bolt 1	1	202.02.16.0
6	Disc spring 50x25,4x3	2	1000253
7	NUT M 24 CASTELLATED	1	1018685
8	Spring latch 10x45	3	1000219
9	Spring latch 5x40	1	1000224
10	Grease fitting M8x1	1	1000234